Number of 3/4" by 4" Nelson studs each face (spacing is 4" o.c.)

Wall Height (feet)

Wind Speed (mph)	8'	10'	12'	14'	15'
80	2	2	3	3	4
90	2	2	3	4	5
100	2	3	4	5	6
110	2	3	5	6	7

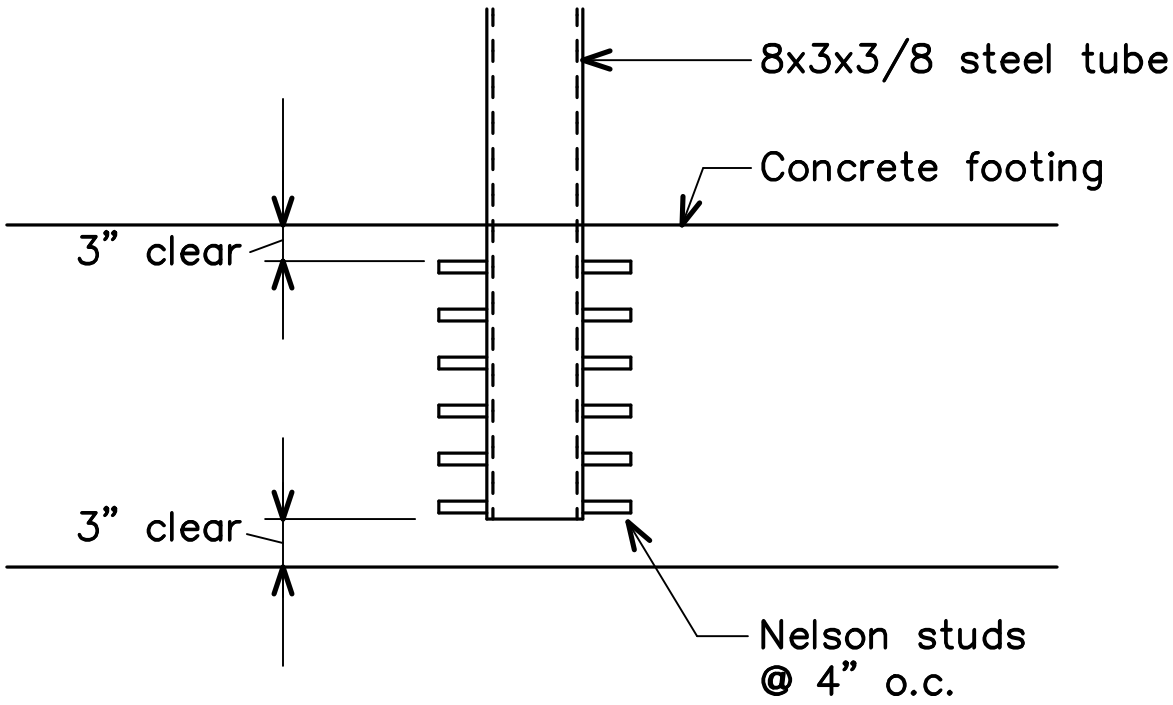

Figure 1

Footing Sizes

Wall Height (feet)

Wind Speed (mph)

	8'	10'	12'	14'	15'
80	A	B	C	D	D
90	B	C	C	D	D
100	B	C	D	E	E
110	B	C	D	F	F

Column spacing 8'–3" OK for all conditions

Footing Sizes (Depth x Width x Length)

A – 2'x2'x3'
B – 2'x2'x4'
C – 2'x2'x5'
D – 2.5'x2.5'x5'
E – 2.5'x3'x5'
F – 3'x3'x5'

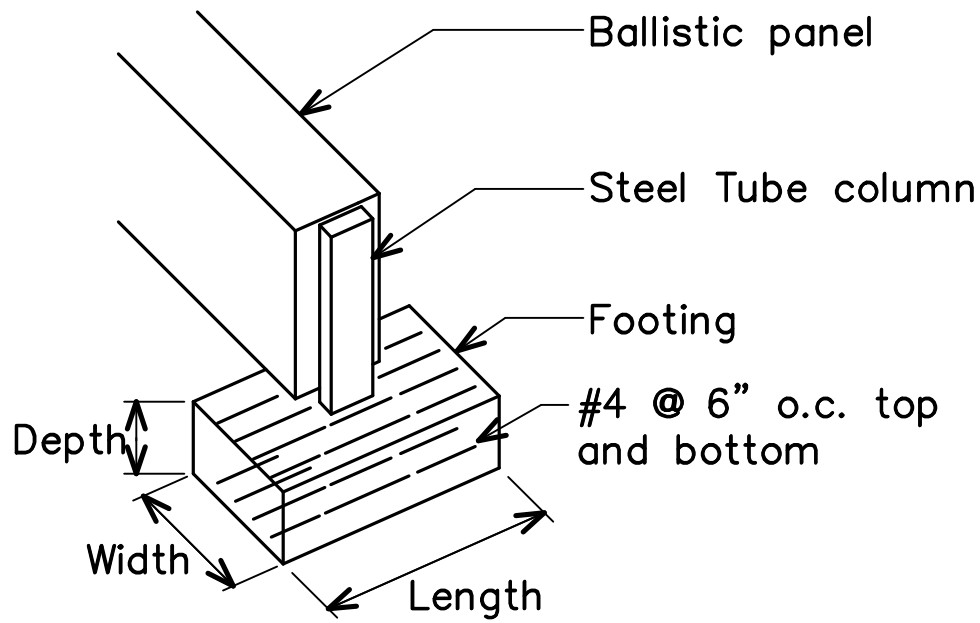

Figure 2

Footing Sizes

Wall Height (feet)

Wind Speed (mph)	8'	10'	12'	14'	15'
80	A	B	C	D	D
90	B	C	C	D	D
100	B	C	D	E	E
110	B	C	D	F	F

Column spacing 8'–3" OK for all conditions except as follows.
For 100 mph wind and H = 15' use 7'–4" spacing
For 110 mph wind and H = 14' use 7'–0" spacing
For 110 mph wind and H = 15' use 6'–2" spacing

Footing Sizes (Depth x Width x Length)

A – 2'x2'x3'
B – 2'x2'x4'
C – 2'x2'x5'
D – 2.5'x2.5'x5'
E – 2.5'x3'x5'
F – 3'x3'x5'

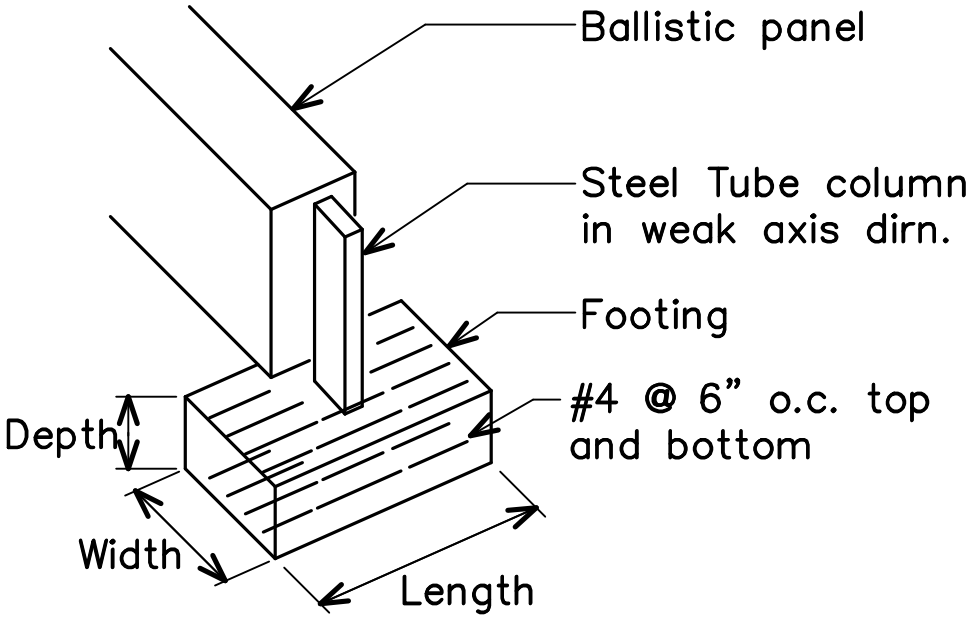

Figure 2A

Number of pairs of 3/4" by 4" Nelson studs each face (spacing is 4" o.c. each way)

Wall Height (feet)

Wind Speed (mph)	14'	16'	18'	20'	22'	24'	26'	28'
80	2	3	3	4	5	6	7	8
90	3	3	4	5	6	8	9	10
100	3	4	5	6	8	9	11	13
110	4	5	6	7	9	11	13	15

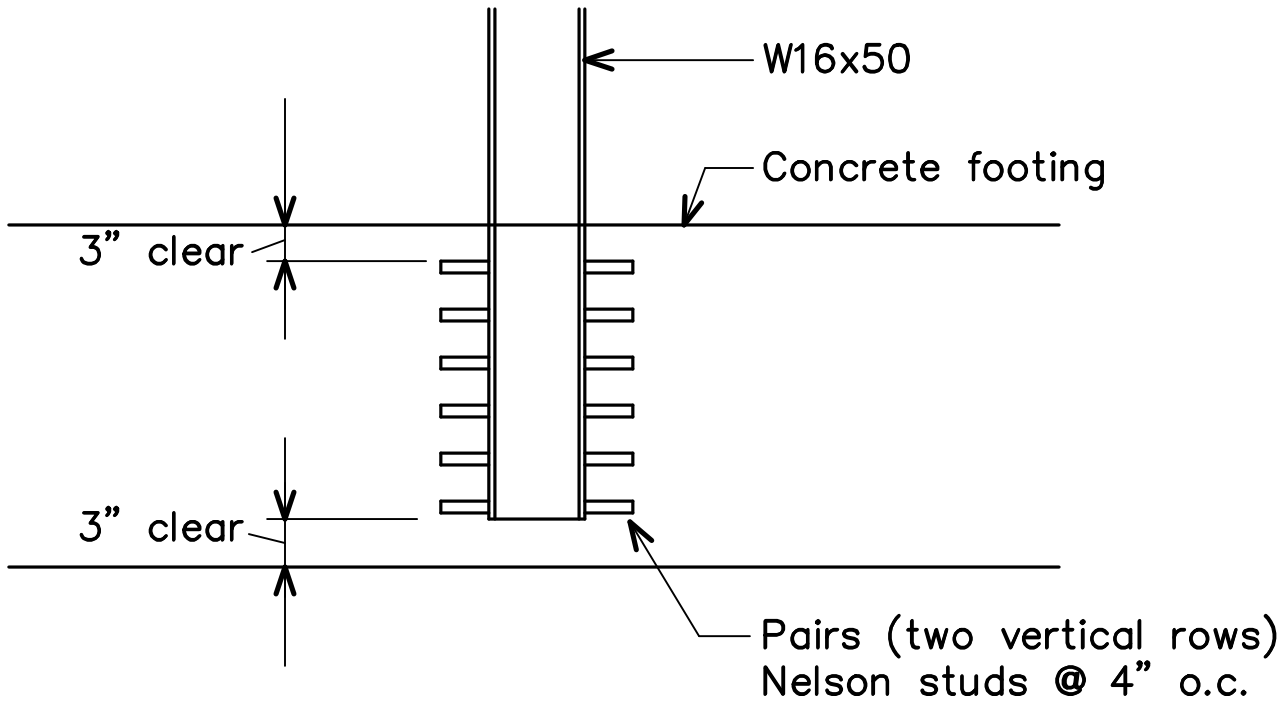

Figure 3

Footing Sizes

Wall Height (feet)

Wind Speed (mph)

	14'	16'	18'	20'	22'	24'	26'	28'
80	G	G	H	J	J	K	L	M
90	G	H	J	J	K	L	M	N
100	H	J	J	K	L	M	P	Q
110	H	J	K	L	M	P	Q	R

Column spacing = 18'–0" OK for all conditions except as follows
For 110 mph wind and H = 26' use 17'–10" spacing
For 110 mph wind and H = 28' use 15'–4" spacing

Footing Sizes (Depth x Width x Length)

G – 2'x4'x6'
H – 2'x4'x7'
J – 2.5'x5'x7'
K – 3'x5'x7'
L – 3.5'x5'x7'
M – 3.5'x5'x8'
N – 4'x5'x8'
P – 4.5'x5'x8'
Q – 5'x5'x8'
R – 5.5'x5'x8'

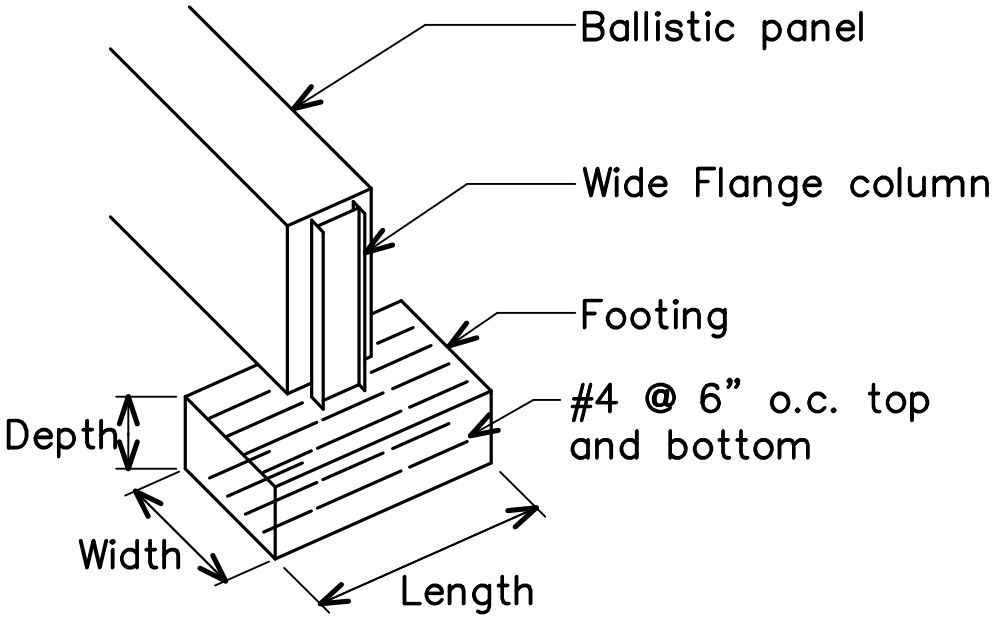

Figure 4

Embedment depth for Piles, no soils report required,
Piles are 24" in diameter, steel tube extends full pile depth

Wall Height (feet)

Wind Speed (mph)	8'	10'	12'	14'	15'
80	5'	5.5'	6'	7'	7'
90	5.5'	6'	6.5'	7.5'	7.5'
100	5.5'	6.5'	7'	8'	8.5'
110	6'	7'	8'	8.5'	9'

Column spacing 8'–3" OK for all conditions except as follows.
For 100 mph wind and H = 15' use 7'–4" spacing
For 110 mph wind and H = 14' use 7'–0" spacing
For 110 mph wind and H = 15' use 6'–2" spacing

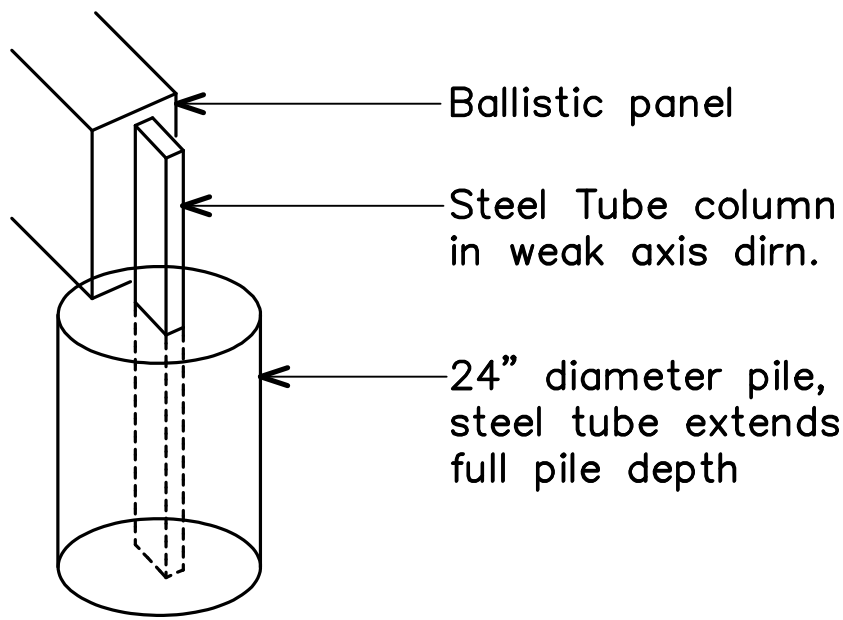

Figure 5

Embedment depth for Piles, no soils report required,
Piles are 30" in diameter, wide flange extends full pile depth

Wall Height (feet)

Wind Speed (mph)	14'	16'	18'	20'	22'	24'	26'	28'
80	8.5'	9'	10'	10.5'	11.5'	12'	12.5'	13.5'
90	9'	10'	10.5'	11.5'	12.5'	13'	14'	14.5'
100	10'	11'	11.5'	12.5'	13.5'	14'	15'	15.5'
110	10.5'	11.5'	12.5'	13.5'	14.5'	15'	16'	17'

Column spacing = 18'–0" OK for all conditions except as follows
For 110 mph wind and H = 26' use 17'–10" spacing
For 110 mph wind and H = 28' use 15'–4" spacing

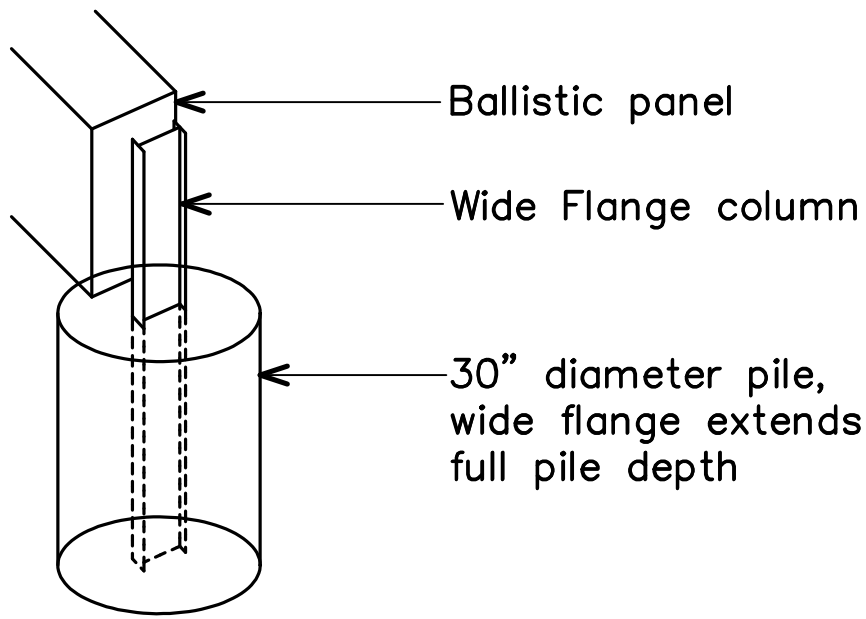

Figure 6

Ballistic Panel Support Systems	**Troy Acoustics Corporation**			
	28358 Constellation Road, #640			
	Santa Clarita, CA 91355			
Property or Item	**Formula or Comment**	**Value**		**Units**
Consider 8x3x3/8 steel tube				
S		12.7		in^3
Ma	28000*S/12	29633		ft-lbs
Consider W16x50 steel beam				
S		81		in^3
Ma	24000*S/12	162000		ft-lbs
Exposure C coefficient, λ				
λ	Exposure C, H = 15'	1.21		
λ	Exposure C, H = 20'	1.29		
λ	Exposure C, H = 25'	1.35		
λ	Exposure C, H = 30'	1.40		
Simplified Desigh Wind Pressure, p530				
85 mph		11.5		psf
90 mph		12.8		psf
100 mph		15.9		psf
105 mph		17.5		psf
110 mph		19.2		psf
80 mph	V100*0.8^2	10.2		psf
90 mph		12.8		psf
100 mph		15.9		psf
110 mph		19.2		psf
Wind Load Factors				
Kzt	no topographic features	1		
I	importance factor	1		
L	2*Ma/(λ*Kzt*I*p530*H^2)			
				page 1

8x3x3/8 @ 80 mph				
L	H=8'	75.0		feet
	10'	48.0		feet
	12'	33.3		feet
	14'	24.5		feet
8x3x3/8 @ 90 mph				
L	H=8'	59.8		feet
	10'	38.3		feet
	12'	26.6		feet
	14'	19.5		feet
8x3x3/8 @ 100 mph				
L	H=8'	48.1		feet
	10'	30.8		feet
	12'	21.4		feet
	14'	15.7		feet
8x3x3/8 @ 110 mph				
L	H=8'	39.9		feet
	10'	25.5		feet
	12'	17.7		feet
	14'	13.0		feet

W16x50 @ 80 mph				
L	H=14'	133.9		feet
	16'	96.2		feet
	18'	76.0		feet
	20'	61.6		feet
	22'	48.6		feet
	24'	40.8		feet
	26'	33.6		feet
	28'	28.9		feet
W16x50 @ 90 mph				
L	H=14'	106.7		feet
	16'	76.6		feet
	18'	60.6		feet
	20'	49.1		feet
	22'	38.7		feet
	24'	32.6		feet
	26'	26.7		feet
	28'	23.1		feet
W16x50 @ 100 mph				
L	H=14'	85.9		feet
	16'	61.7		feet
	18'	48.8		feet
	20'	39.5		feet
	22'	31.2		feet
	24'	26.2		feet
	26'	21.5		feet
	28'	18.6		feet
W16x50 @ 110 mph				
L	H=14'	71.2		feet
	16'	51.1		feet
	18'	40.4		feet
	20'	32.7		feet
	22'	25.8		feet
	24'	21.7		feet
	26'	17.8		feet
	28'	15.4		feet
				page 3

Spacing for Steel Tube Column				
L		8.33		feet
M	λ*Kzt*I*p530*L*H^2/2			
8x3x3/8 @ 80 mph				
M	H=8'	3290		ft-lbs
	10'	5140		ft-lbs
	12'	7402		ft-lbs
	14'	10075		ft-lbs
	15'	11566		ft-lbs
8x3x3/8 @ 90 mph				
M	H=8'	4128		ft-lbs
	10'	6451		ft-lbs
	12'	9289		ft-lbs
	14'	12643		ft-lbs
	15'	14514		ft-lbs
8x3x3/8 @ 100 mph				
M	H=8'	5128		ft-lbs
	10'	8013		ft-lbs
	12'	11539		ft-lbs
	14'	15706		ft-lbs
	15'	18029		ft-lbs
8x3x3/8 @ 110 mph				
M	H=8'	6193		ft-lbs
	10'	9676		ft-lbs
	12'	13934		ft-lbs
	14'	18965		ft-lbs
	15'	21771		ft-lbs
Moment transfer into footing, Nelson Studs				
fc'		2500		psi
fa	0.45*fc'	1125		psi
Use 3/4" by 4" Nelson Studs @ 4" o.c.				
D		0.75		inches
L		4		inches
d		8		inches
P	fa*D*L	3375		lbs
Ma	P*(d+L)/12	3375		ft-lbs
Number of Studs required				
N	M/Ma			
				page 4

8x3x3/8 @ 80 mph				
N	H=8'	1.0		
	10'	1.5		
	12'	2.2		
	14'	3.0		
	15'	3.4		
8x3x3/8 @ 90 mph				
N	H=8'	1.2		
	10'	1.9		
	12'	2.8		
	14'	3.7		
	15'	4.3		
8x3x3/8 @ 100 mph				
N	H=8'	1.5		
	10'	2.4		
	12'	3.4		
	14'	4.7		
	15'	5.3		
8x3x3/8 @ 110 mph				
N	H=8'	1.8		
	10'	2.9		
	12'	4.1		
	14'	5.6		
	15'	6.5		

Number of Studs required, upgraded				
8x3x3/8 @ 80 mph				
N	H=8'	2		
	10'	2		
	12'	3		
	14'	3		
	15'	4		
8x3x3/8 @ 90 mph				
N	H=8'	2		
	10'	2		
	12'	3		
	14'	4		
	15'	5		
8x3x3/8 @ 100 mph				
N	H=8'	2		
	10'	3		
	12'	4		
	14'	5		
	15'	6		
8x3x3/8 @ 110 mph				
N	H=8'	2		
	10'	3		
	12'	5		
	14'	6		
	15'	7		
Embedment required, depth of footing required				
E	4*N+6			
				page 6

Embedment Required				
8x3x3/8 @ 80 mph				
E	H=8'	14		inches
	10'	14		inches
	12'	18		inches
	14'	18		inches
	15'	22		inches
8x3x3/8 @ 90 mph				
E	H=8'	14		inches
	10'	14		inches
	12'	18		inches
	14'	22		inches
	15'	26		inches
8x3x3/8 @ 100 mph				
E	H=8'	14		inches
	10'	18		inches
	12'	22		inches
	14'	26		inches
	15'	30		inches
8x3x3/8 @ 110 mph				
E	H=8'	14		inches
	10'	18		inches
	12'	26		inches
	14'	30		inches
	15'	34		inches
Footing Size				
assume 1:2:3 footing size				
wc	weight density of concrete	150		pcf
d	depth of footing			feet
b	width of footing = 2*d			feet
L	length of footing = 3*d			feet
W	weight of footing = 150*d*2d*3d			
x	moment arm = 2*L/3 = 2d			
M	W*x = 1800*d^4			
dr	(M/1800)^(1/4)			
M	150*d*b*L*x = 100*d*b*L^2			
				page 7

Depth of footing - feet				
8x3x3/8 @ 80 mph				
d	H=8'	1.16		feet
	10'	1.30		feet
	12'	1.42		feet
	14'	1.54		feet
	15'	1.59		feet
8x3x3/8 @ 90 mph				
d	H=8'	1.23		feet
	10'	1.38		feet
	12'	1.51		feet
	14'	1.63		feet
	15'	1.69		feet
8x3x3/8 @ 100 mph				
d	H=8'	1.30		feet
	10'	1.45		feet
	12'	1.59		feet
	14'	1.72		feet
	15'	1.78		feet
8x3x3/8 @ 110 mph				
d	H=8'	1.36		feet
	10'	1.52		feet
	12'	1.67		feet
	14'	1.80		feet
	15'	1.86		feet
Specific Footing Sizes				
A = 2x2x3				
Ma	100*2*2*3^2	3600		ft-lbs
B = 2x2x4				
Ma	100*2*2*4^2	6400		ft-lbs
C = 2x2x5				
Ma	100*2*2*5^2	10000		ft-lbs
D = 2.5x2.5x5				
Ma	100*2.5*2.5*5^2	15625		ft-lbs
E = 2.5x3x5				
Ma	100*2.5*3*5^2	18750		ft-lbs
F = 3x3x5				
Ma	100*3*3*5^2	22500		ft-lbs
				page 8

Reinforcing				
A = 2x2x3				
b		24		inches
d	24-3	21		inches
z	0.87*d	18.27		inches
T	12*Ma/d	2365		lbs
Asr	T/24000	0.10		in^2
Use #4 @ 6" o.c.				
B = 2x2x4				
b		24		inches
d	24-3	21		inches
z	0.87*d	18.27		inches
T	12*Ma/d	4204		lbs
Asr	T/24000	0.18		in^2
Use #4 @ 6" o.c.				
C = 2x2x5				
b		24		inches
d	24-3	21		inches
z	0.87*d	18.27		inches
T	12*Ma/d	6568		lbs
Asr	T/24000	0.27		in^2
Use #4 @ 6" o.c.				
D = 2.5x2.5x5				
b		30		inches
d	30-3	27		inches
z	0.87*d	23.49		inches
T	12*Ma/d	7982		lbs
Asr	T/24000	0.33		in^2
Use #4 @ 6" o.c.				
E = 2.5x3x5				
b		36		inches
d	36-3	33		inches
z	0.87*d	28.71		inches
T	12*Ma/d	7837		lbs
Asr	T/24000	0.33		in^2
Use #4 @ 6" o.c.				
F = 3x3x5				
b		36		inches
d	36-3	33		inches
z	0.87*d	28.71		inches
T	12*Ma/d	9404		lbs
Asr	T/24000	0.39		in^2
Use #4 @ 6" o.c.				
				page 9

Spacing for Wide Flange Column				
L		16		feet
M	λ*Kzt*I*p530*L*H^2/2			
W16x50 @ 80 mph				
M	H=14'	19352		ft-lbs
	16'	26948		ft-lbs
	18'	34106		ft-lbs
	20'	42106		ft-lbs
	22'	53317		ft-lbs
	24'	63452		ft-lbs
	26'	77226		ft-lbs
	28'	89564		ft-lbs
W16x50 @ 90 mph				
M	H=14'	24285		ft-lbs
	16'	33817		ft-lbs
	18'	42799		ft-lbs
	20'	52838		ft-lbs
	22'	66908		ft-lbs
	24'	79626		ft-lbs
	26'	96911		ft-lbs
	28'	112394		ft-lbs
W16x50 @ 100 mph				
M	H=14'	30167		ft-lbs
	16'	42007		ft-lbs
	18'	53165		ft-lbs
	20'	65635		ft-lbs
	22'	83112		ft-lbs
	24'	98911		ft-lbs
	26'	120382		ft-lbs
	28'	139615		ft-lbs
W16x50 @ 110 mph				
M	H=14'	36428		ft-lbs
	16'	50725		ft-lbs
	18'	64199		ft-lbs
	20'	79258		ft-lbs
	22'	100362		ft-lbs
	24'	119439		ft-lbs
	26'	145367		ft-lbs
	28'	168591		ft-lbs
Moment transfer into footing, Nelson Studs				
fc'		2500		psi
fa	0.45*fc'	1125		psi
Use 3/4" by 4" Nelson Studs @ 4" o.c.				
D		0.75		inches
L		4		inches
d		16		inches
P	fa*D*L	3375		lbs
Ma - two rows	2*P*(d+L)/12	11250		ft-lbs
				page 10

Number of Studs required each row				
N	M/Ma			
W16x50 @ 80 mph				
N	H=14'	1.7		
	16'	2.4		
	18'	3.0		
	20'	3.7		
	22'	4.7		
	24'	5.6		
	26'	6.9		
	28'	8.0		
W16x50 @ 90 mph				
N	H=14'	2.2		
	16'	3.0		
	18'	3.8		
	20'	4.7		
	22'	5.9		
	24'	7.1		
	26'	8.6		
	28'	10.0		
W16x50 @ 100 mph				
N	H=14'	2.7		
	16'	3.7		
	18'	4.7		
	20'	5.8		
	22'	7.4		
	24'	8.8		
	26'	10.7		
	28'	12.4		
W16x50 @ 110 mph				
N	H=14'	3.2		
	16'	4.5		
	18'	5.7		
	20'	7.0		
	22'	8.9		
	24'	10.6		
	26'	12.9		
	28'	15.0		
				page 11

Number of Studs required each row, upgraded				
W16x50 @ 80 mph				
N	H=14'	2		
	16'	3		
	18'	3		
	20'	4		
	22'	5		
	24'	6		
	26'	7		
	28'	8		
W16x50 @ 90 mph				
N	H=14'	3		
	16'	3		
	18'	4		
	20'	5		
	22'	6		
	24'	8		
	26'	9		
	28'	10		
W16x50 @ 100 mph				
N	H=14'	3		
	16'	4		
	18'	5		
	20'	6		
	22'	8		
	24'	9		
	26'	11		
	28'	13		
W16x50 @ 110 mph				
N	H=14'	4		
	16'	5		
	18'	6		
	20'	7		
	22'	9		
	24'	11		
	26'	13		
	28'	15		
Embedment required, depth of footing required				
E	4*N+6			
				page 12

Embedment Required				
W16x50 @ 80 mph				
E	H=14'	14		inches
	16'	18		inches
	18'	18		inches
	20'	22		inches
	22'	26		inches
	24'	30		inches
	26'	34		inches
	28'	38		inches
W16x50 @ 90 mph				
E	H=14'	18		inches
	16'	18		inches
	18'	22		inches
	20'	26		inches
	22'	30		inches
	24'	38		inches
	26'	42		inches
	28'	46		inches
W16x50 @ 100 mph				
E	H=14'	18		inches
	16'	22		inches
	18'	26		inches
	20'	30		inches
	22'	38		inches
	24'	42		inches
	26'	50		inches
	28'	58		inches
W16x50 @ 110 mph				
E	H=14'	22		inches
	16'	26		inches
	18'	30		inches
	20'	34		inches
	22'	42		inches
	24'	50		inches
	26'	58		inches
	28'	66		inches
Footing Size				
assume 1:2:3 footing size				
wc	weight density of concrete	150		pcf
d	depth of footing			feet
b	width of footing = 2*d			feet
L	length of footing = 3*d			feet
W	weight of footing = 150*d*2d*3d			
x	moment arm = 2*L/3 = 2d			
M	W*x = 1800*d^4			
dr	(M/1800)^(1/4)			
M	150*d*b*L*x = 100*d*b*L^2			
				page 13

Depth of footing - feet				
W16x50 @ 80 mph				
d	H=14'	1.81		feet
	16'	1.97		feet
	18'	2.09		feet
	20'	2.20		feet
	22'	2.33		feet
	24'	2.44		feet
	26'	2.56		feet
	28'	2.66		feet
W16x50 @ 90 mph				
d	H=14'	1.92		feet
	16'	2.08		feet
	18'	2.21		feet
	20'	2.33		feet
	22'	2.47		feet
	24'	2.58		feet
	26'	2.71		feet
	28'	2.81		feet
W16x50 @ 100 mph				
d	H=14'	2.02		feet
	16'	2.20		feet
	18'	2.33		feet
	20'	2.46		feet
	22'	2.61		feet
	24'	2.72		feet
	26'	2.86		feet
	28'	2.97		feet
W16x50 @ 110 mph				
d	H=14'	2.12		feet
	16'	2.30		feet
	18'	2.44		feet
	20'	2.58		feet
	22'	2.73		feet
	24'	2.85		feet
	26'	3.00		feet
	28'	3.11		feet
				page 14

Specific Footing Sizes				
G = 2x4x6				
Ma	100*2*4*6^2	28800		ft-lbs
H = 2x4x7				
Ma	100*2*4*7^2	39200		ft-lbs
J = 2.5x5x7				
Ma	100*2.5*5*7^2	61250		ft-lbs
K = 3x5x7				
Ma	100*3*5*7^2	73500		ft-lbs
L = 3.5x5x7				
Ma	100*3.5*5*7^2	85750		ft-lbs
M = 3.5x5x8				
Ma	100*3.5*5*8^2	112000		ft-lbs
N = 4x5x8				
Ma	100*4*5*8^2	128000		ft-lbs
P = 4.5x5x8				
Ma	100*4.5*5*8^2	144000		ft-lbs
Q = 5x5x8				
Ma	100*5*5*8^2	160000		ft-lbs
R = 5.5x5x8				
Ma	100*5.5*5*8^2	176000		ft-lbs

Reinforcing				
G = 2x4x6				
b		48		inches
d	24-3	21		inches
z	0.87*d	18.27		inches
T	12*Ma/d	18916		lbs
Asr	T/24000	0.79		in^2
Use #4 @ 6" o.c.				
H = 2x4x7				
b		48		inches
d	24-3	21		inches
z	0.87*d	18.27		inches
T	12*Ma/d	25747		lbs
Asr	T/24000	1.07		in^2
Use #4 @ 6" o.c.				
J = 2.5x5x7				
b		60		inches
d	30-3	27		inches
z	0.87*d	23.49		inches
T	12*Ma/d	31290		lbs
Asr	T/24000	1.30		in^2
Use #4 @ 6" o.c.				
K = 3x5x7				
b		60		inches
d	36-3	33		inches
z	0.87*d	28.71		inches
T	12*Ma/d	30721		lbs
Asr	T/24000	1.28		in^2
Use #4 @ 6" o.c.				
L = 3.5x5x7				
b		60		inches
d	42-3	39		inches
z	0.87*d	33.93		inches
T	12*Ma/d	30327		lbs
Asr	T/24000	1.26		in^2
Use #4 @ 6" o.c.				
M = 3.5x5x8				
b		60		inches
d	42-3	39		inches
z	0.87*d	33.93		inches
T	12*Ma/d	39611		lbs
Asr	T/24000	1.65		in^2
Use #4 @ 6" o.c.				
				page 16

N = 4x5x8				
b		60		inches
d	48-3	45		inches
z	0.87*d	39.15		inches
T	12*Ma/d	39234		lbs
Asr	T/24000	1.63		in^2
Use #4 @ 6" o.c.				
P = 4.5x5x8				
b		60		inches
d	54-3	51		inches
z	0.87*d	44.37		inches
T	12*Ma/d	38945		lbs
Asr	T/24000	1.62		in^2
Use #4 @ 6" o.c.				
Q = 5x5x8				
b		60		inches
d	60-3	57		inches
z	0.87*d	49.59		inches
T	12*Ma/d	38717		lbs
Asr	T/24000	1.61		in^2
Use #4 @ 6" o.c.				
R = 5.5x5x8				
b		60		inches
d	66-3	63		inches
z	0.87*d	54.81		inches
T	12*Ma/d	38533		lbs
Asr	T/24000	1.61		in^2
Use #4 @ 6" o.c.				